Dimension Drawing

Masterzen

XPR W300

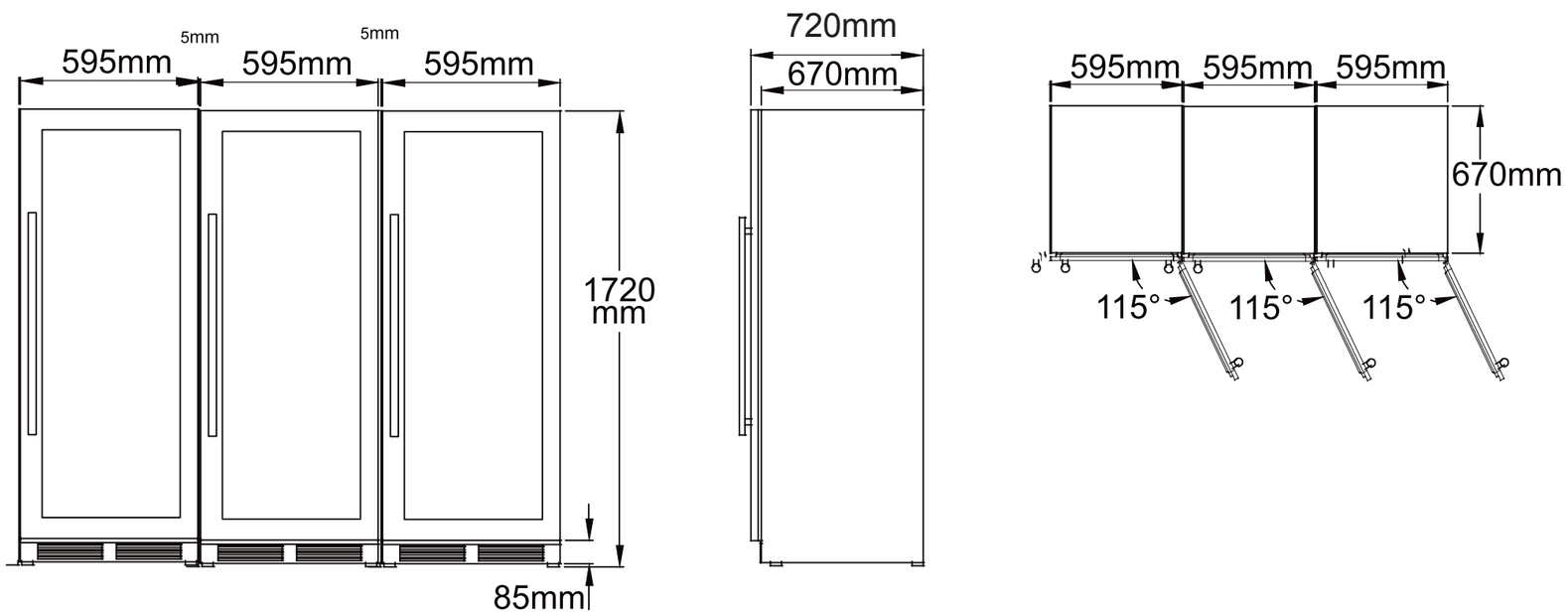

Installation Drawing

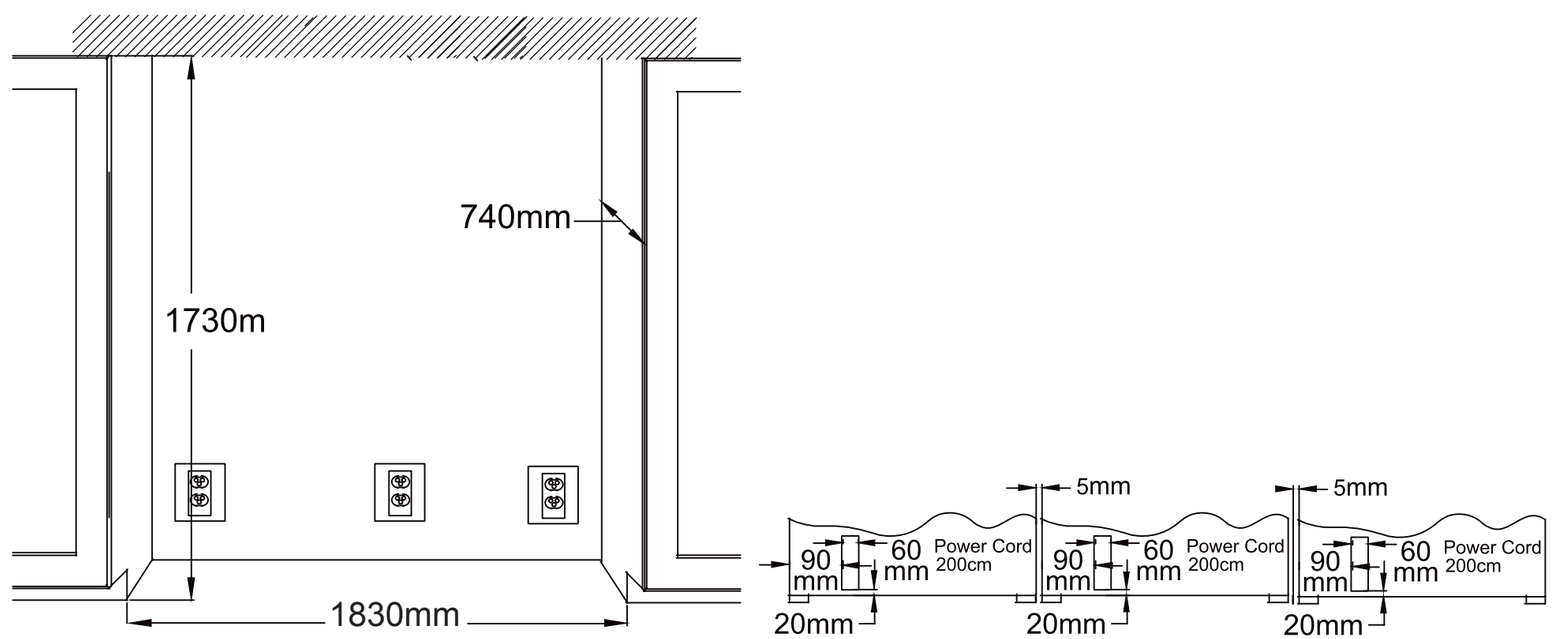

Cabinet Cut-Out